STAHLWILLE®

DAPTIQ

The interconnected dimension of handtools.

Digital Asset
Being able to link tools into a customer's digital network is a decisive benefit to the customer. Data exchange, storage, archiving and evaluation produce greater levels of safety, security and efficiency – not only in production and maintenance, but also in tool asset management.

DAPTIQ

Intelligence Quotient
The ability to exchange data in realtime and communication between products and with the central production control system makes tools smart and helps to organise workflows more efficiently while preventing errors. This also includes linking to augmented reality systems – as used for intelligent worker guidance.

Product Technology
The name 'STAHLWILLE' is a byword for premium-class product technology. This can be demonstrated using many examples – from mechanical and electromechanical trigger mechanisms to integration-capable tools. The focus is always on customer benefit – and that, understandably, includes DAPTIQ solutions.

With today under control.
And an eye on the future.

Anything that can be digitalised will be digitalised. Anything that can be interconnected will be interconnected. That is the essence of the current megatrend towards digitalisation. What does this mean for STAHLWILLE?

The fourth industrial revolution is having a considerable influence on activities within STAHLWILLE. As a leading innovator and pacesetter in the field of torque technology, we have been developing our torque tools, measurement devices, calibration devices and software solutions from a strategic viewpoint for some time. But what exactly are we doing to respond to the idea of networking workflows in production and service? How are we reacting to the challenges presented by production supervision and control systems? The answer is quite simple: through our strategic »Industry 4.0« approach!

We have taken a role as pioneers and this has once again led to new paths. The result of this is DAPTIQ, our new label for interconnective systems made by STAHLWILLE to enable users to reap the benefits of digitalisation and considerably increase efficiency and process capability by integrating them in their own systems.

This, our first, DAPTIQ portfolio is intended to show you the smart solutions we currently have available – whether in the field of torque tools or asset control in tool storage systems. We are already looking forward to developing more networked and integration-capable solutions together with you.

We trust you will find inspiration in the interconnectivity to be discovered here. Let DAPTIQ capture your imagination!

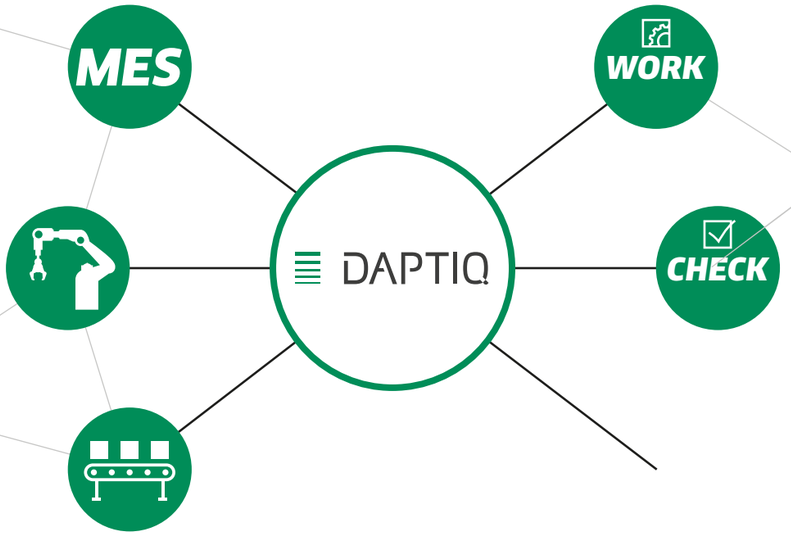

Horizontal networking.
The key to integrated production.

STAHLWILLE's DAPTIQ is leading the way: DAPTIQ products can not only communicate with other DAPTIQ products, they also communicate with the controlling and monitoring systems in their specified work environment.

The ability of a tool to become integrated in a digital environment is ultimately decided by the interface it uses to communicate with the production planning and control system, inspection, measuring, and test equipment (IMTE) management and enterprise resource planning (ERP). This is one area in which DAPTIQ shines: STAHLWILLE uses open-source interfaces – interfaces that can be continuously developed, that grow and provide maximum transparency, simplicity and flexibility.

But that is not all: in order to link DAPTIQ products, customers do not have to make complex intrusions in their IT infrastructure. Neither do they have to purchase any additional proprietary software for the purpose.

DAPTIQ makes customers flexible. They can respond to changes in the production process quickly and easily. If modifications are necessary, they can be completed quickly in-house. Where a customer has corresponding integration skills available, a company can set up all the required interactions and sequence controls itself with relatively little effort. STAHLWILLE is pleased to provide all the necessary information to enable customers to do so.

These are key characteristics that represent essential preconditions for making an Industry 4.0 concept succeed. Networked production will not become mature enough for the mass market until tool and plant manufacturers free themselves of insular solutions to enable tools to communicate across system boundaries and thus enable horizontal networking.

Set course for a new world.
With your proven partner.

STAHLWILLE is renowned for its customer-orientated approach. Launching products and solutions jointly with our customers is part of this enterprise's DNA. DAPTIQ solutions are no different in this respect. If you need us, please contact STAHLWILLE staff, who will be pleased to assist.

A company wishing to integrate network-capable tool solutions in its processes – whether in production, quality assurance, test-equipment inspection, tool management or some other field – can do no better than choose DAPTIQ. All DAPTIQ products and solutions can be controlled directly by the appropriate systems and integrated into them.

For STAHLWILLE, relations with customers have always gone beyond just selling a product. Any company that needs more information about the opportunities afforded by networking, about how DAPTIQ can be used to good effect in its own work environment, can count on STAHLWILLE experts to provide answers relating to digitalisation, networking and Industry 4.0. They will also be pleased to support you in planning and implementing your integration moves using DAPTIQ solutions.

Have you got any queries about DAPTIQ?
Just contact our team of experts. They are always available and will be pleased to find the right solution for you.

Contact:
daptiq@stahlwille.de

WORK. CHECK.
Two different fields. Innumerable opportunities.

DAPTIQ solutions can be integrated in so many different and diverse system environments. They improve efficiency and dependability of workflows in two crucial areas – and unleash additional optimising potential and greater safety and security for the company in question. STAHLWILLE calls this triple system environment WORK and CHECK.

WORK stands for solutions that can be networked and can be integrated in the production work environment. They are ideally prepared for inter-operation with the production control system. They reduce costs and increase the quality of both processes and products.

CHECK stands for solutions that can easily be integrated in standard computer-aided quality systems (CAQ) for IMTE management. The customer will, at all times, have access through its top-level system to data such as that recorded by the STAHLWILLE TORKMASTER software during a calibration job. This makes audits less complex.

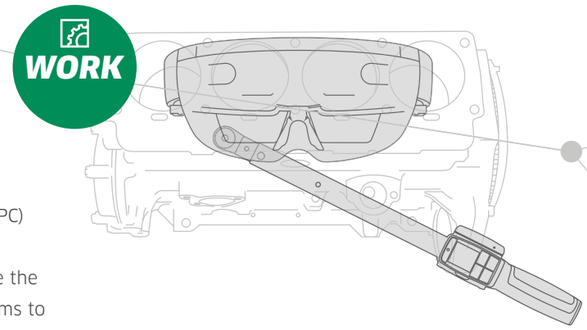

Intelligent worker guidance and more.
A production planning and control system (PPC) is frequently a core element in today's production environments. Tool solutions like the MANOSKOP® 766 DAPTIQ permit such systems to steer processes and workflows more securely and more efficiently and truncate induction times. The PPC can transmit messages to the display on the MANOSKOP®, give instructions, read out data and adjust settings.

It is also perfectly realistic to use the tool in a mixed reality environment. Based on the real-time data the MANOSKOP® 766 DAPTIQ sends to the PPC in conjunction with the fastener sequences stored in the PPC, the fastener location, instructions and results of the tightening action can be transmitted live to the worker by means of an AR visor. The worker sees both the position of the fastener displayed on the visor and the torque that he or she is applying. This allows the human error factor to be reduced to a minimum. In the process, the PPC automatically has access to all the fastener details – they are securely documented at a central location without any further action by the user.

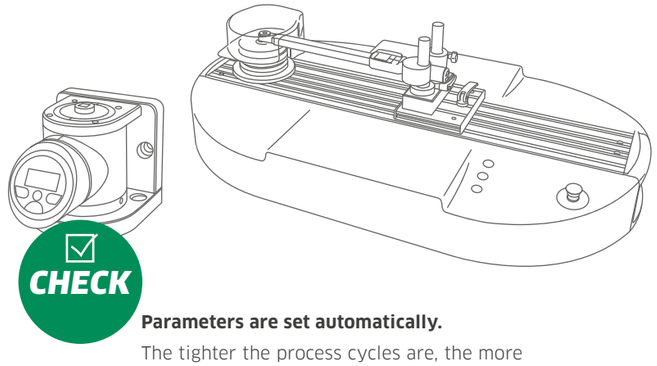

Parameters are set automatically.
The tighter the process cycles are, the more important proactive scheduling of test-equipment inspection becomes. This is why STAHLWILLE allows the TORKMASTER software – and with it the intelligence behind the fully automatic calibrating unit perfectControl – to be linked to the IMTE management or CAQ system. If the CAQ system recognises that a particular tool is due for a scheduled calibration, it can trigger a corresponding process. The user simply has to place the tool in the calibrating unit. Tagged torque wrenches are detected here as soon as they are in range. All the preparatory testing and calibrating settings are then selected automatically by the perfectControl unit. As soon as calibration has been completed, the corresponding data is available to the system for logging. The same applies to checks to see if a tool is still operating within the tolerances. The SmartCheck DAPTIQ tester can also be linked to the CAQ system.

Security. Integrated.
MANOSKOP® 766 DAPTIQ.

Using the integrated wireless module, MANOSKOP® 766 DAPTIQ can communicate bidirectionally with other tools, appliances and the PPC and, in this way, receive instructions and settings. An ideal capability in production in the context of Industry 4.0.

For the user, this has a decisive advantage: he or she can concentrate fully on the task in hand – it is not necessary to adjust any settings. For the enterprise, the benefits are far greater: production processes run more efficiently, the »human factor« as a possible source of errors is minimised in many process steps and consistently high product quality is ensured. At the same time, induction and instruction times are much reduced. And the PPC can independently read out and store all the data required for legally watertight documentation purposes.

INTELLIGENT

MANOSKOP® 766 DAPTIQ is the ideal torque tool for highly flexible, semi-automated work environments. It is integration- and Industry 4.0 capable thanks to its bidirectional open-source interface and wireless module.

INTEGRATION MEETS PRECISION.

ACCURATE

MANOSKOP® 766 DAPTIQ transmits signals at extremely short intervals. This means the PPC always has a detailed picture of the current tightening action and can intervene precisely if necessary.

Additional benefits

- **Electromechanical.** MANOSKOP® 766 DAPTIQ delivers the best of both worlds: absolute accuracy, diverse programming options and logging functionality, thanks to the intuitive digital operator guidance system, coupled with the tactile benefit of the »click« from a mechanical trigger mechanism.
- **Logging function.** All the fastener readings can be fully and automatically read out via the wireless connection and stored in the enterprise's control systems. In this way, MANOSKOP® 766 DAPTIQ provides a measurable improvement in process efficiency and safety.
- **Flexible.** Two measuring methods (torque / tightening angle).
- **Multisensory.** Acoustic and visual assessment of each measurement.
- **Exact.** Thanks to the extremely low indication of deviation (± 2% for torque and ± 1% for angle).

INTEGRATION CAPABLE

STAHLWILLE has made all the control commands for the MANOSKOP® 766 DAPTIQ openly accessible. This means that system integrators at the customer's site can use exactly the commands they need to link the tool into their production workflows in just the way they need.

Flexible. Interconnected.
SmartCheck DAPTIQ.

Precision measurement technology in a compact, robust housing – now also interconnected.

The SmartCheck DAPTIQ torque tester has an interface and uses RFID technology to recognise other tools when they are in range. This releases the user from superfluous processing steps, guarantees faster inspection and ensures the readings are always correctly assigned to the tool being inspected. Since it is connected to the CAQ system, that system has access to all the data for automated process control and logging – in realtime, of course.

A CLEAR VIEW AT ALL TIMES

REVOLUTIONARY

SmartCheck DAPTIQ can easily be adjusted to suit the user's angle of sight. Not only the display but also the display mount and base body can be rotated through 180°.

Additional benefits

- **Exact.** The indicated deviation of a mere ± 1% guarantees reliable measurement results.
- **Robust.** The integrated visual and audible overload protection ensures the durability customers expect of STAHLWILLE.
- **Ready for work.** Thanks to the integrated transducer with a broad measuring range, work can start immediately.
- **Individual.** Three operating modes (track, first peak, peak hold) and three measuring units (N·m, ft·lb, in·lb) can be selected. The target torque and tolerances can be individually set to evaluate the readings.
- **Flexible.** Available for four torque ranges: 1–10 N·m, 10–100 N·m, 40–400 N·m, 80–800 N·m.

SAFE

The SmartCheck DAPTIQ tester not only measures extremely accurately, it also transmits the readings to the CAQ system when it receives a corresponding request.

COMPACT

The unit can be used anywhere and can be mounted on the wall.

INDEPENDENT

Ideal for use on the road if there are no power sockets available. Besides the usual operating mode using a mains adapter, this unit can be run on batteries (4 x AAA or 1 x 9 V block, adapter included).

Well connected. Accurate.
perfectControl DAPTIQ.

The automatic perfectControl DAPTIQ calibrating unit is easy to integrate in the CAQ system by means of the TORKMASTER software supplied and is equipped with an RFID reader to enable it to detect tools. This speeds up workflows in the calibration laboratory and increases efficiency.

Even without CAQ integration, the motorised perfectControl DAPTIQ considerably reduces the amount of time and effort required for calibration and adjustment of torque wrenches. perfectControl DAPTIQ permits measurement without the risk of displacement of the force loading point and ensures extremely precise calibration. Thanks to the CAQ interface, it simultaneously ensures improved, faster more easily verifiable control of monitoring and measuring equipment, because the CAQ system can exchange data through TORKMASTER.

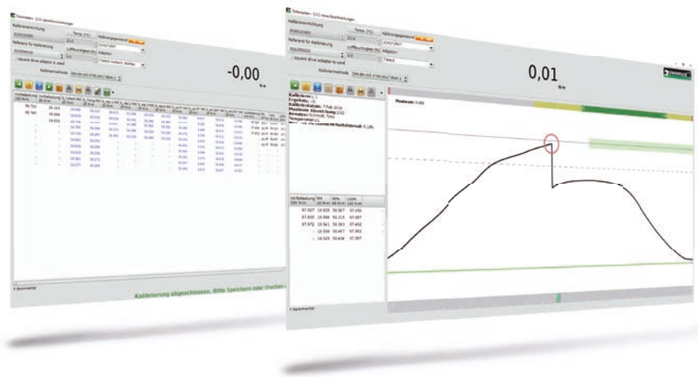

EFFECTIVE

The TORKMASTER software supplied contains comprehensive parameter databases with measuring and test points for STAHLWILLE torque tools, enabling particularly fast, automatic testing and calibration in accordance with the latest version of DIN EN ISO 6789:2017 Parts 1 and 2.

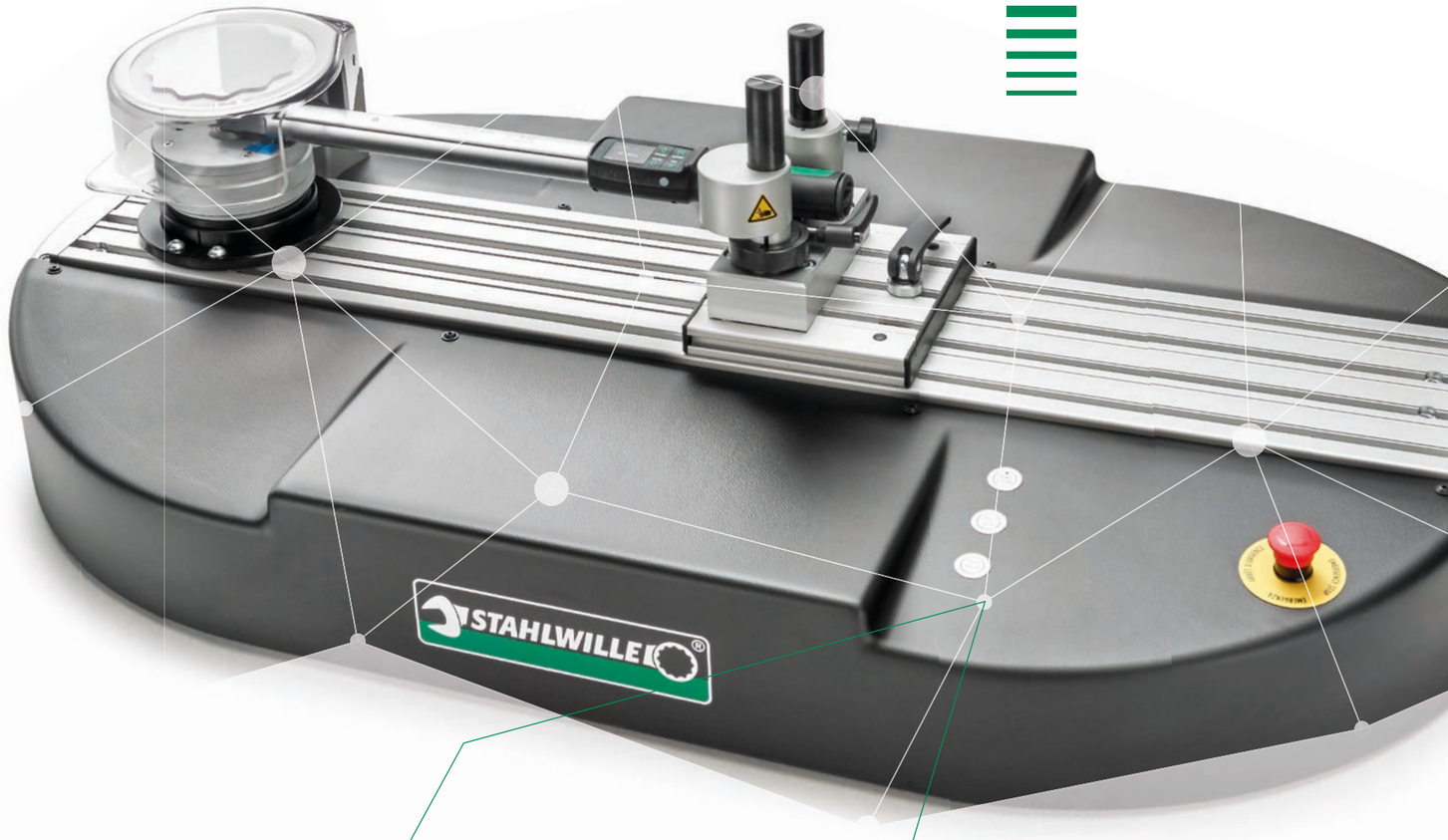

SET TO DELIVER PERFECTION.

Additional benefits

- **Accurate.** All measurements are possible without moving the point of application of force. The transducers detect exactly, digitise the measurements and transmit them to the PC.
- **Modular.** The basic versions of perfectControl will calibrate torque wrenches up to 400 N·m. If the 7791-1 Extension Unit is added, calibrations up to 1000 N·m are possible.
- **Safe.** The accurately mounted spindle and the finely controlled motor prevent incorrect measurements.
- **Individual.** perfectControl 7794-3 is also suitable for calibrating angle-controlled wrenches. Thanks to the integrated motor, the working height can be adjusted to suit the user.

RECOGNITION

perfectControl DAPTIQ identifies the torque wrench to be calibrated by means of RFID. The appropriate data record is automatically transmitted by the CAQ system to the TORKMASTER software. All the necessary settings are automatically made.

CENTRAL CONTROL

The superordinate CAQ system has access to all the test data all the time. The user is not required to do anything – all the data and logs of the calibration process are securely transmitted.

The DAPTIQ range is expanding – **to meet our customers' requirements.**

STAHLWILLE is continuing to add to its DAPTIQ range. Products that promise to deliver added value to customers in connection with networked production will, in future, always be available as DAPTIQ versions. The TORSIOTRONIC is the first in the list.

This new electromechanical torque screwdriver from STAHLWILLE is absolutely unique on the market. It delivers the best of both worlds to the user: the many advantages of digital, that is, extremely accurate, torque measurement for clockwise and anticlockwise tightening coupled with the proven tactile benefit of the »click« from a mechanical trigger mechanism – in both directions.

The intuitive operator guidance system with its easy-to-use menu structure enables the TORSIOTRONIC to be used quickly and effectively without the usual steep learning curve. With the aid of only four buttons and a bright OLED display, standard fastener details can be manually entered with ease. If the electromechanical torque screwdriver is connected up to a PC running the STAHLWILLE software SENSOMASTER 4, via the micro-USB interface, users have a large number of additional options. Whether it is an individual fastener or a series of complex work sequences, they can all be set up in advance and transferred to the tool. The core of the electromechanical system is a virtually wear-free, patented trigger mechanism. As soon as the preset tightening torque is reached, the screwdriver triggers with tactile and audible signals.

Flexible
Available for four torque ranges: 12–120 cN·m, 30–300 cN·m, 60–600 cN·m and 100–1000 cN·m.

TORSIOTRONIC
TORSIOTRONIC also supports you when it comes to documenting jobs. The electronic torque screwdriver is capable of storing no less than 2500 tightening jobs and sequences. All the data can then be read out and transferred to a PC later, using the micro-USB interface, for processing and archiving.

The DAPTIQ version of this tool will soon be available and will be in a position to transmit all this data in realtime to the production control system. It will be able to receive settings and apply them automatically. And many other functions.

STAHLWILLE Eduard Wille GmbH & Co. KG · Lindenallee 27 · 42349 Wuppertal · Germany
Tel.: +49 202 4791-0 · Fax: +49 202 4791-200 · daptiq@stahlwille.de · www.stahlwille.de

91 97 50 01